Allied Data Sheet — Product ID ALV710U3s-QC7

PRODUCT NAME

Multi-function Intrinsical solenoid valves of Aluminum

MODEL NO.ALV710U3-QC7

DESCRIPTION OF THE PRODUCT

The multi-function flameproof solenoid valves of aluminum is available with both Namur connection and In-line connection and also is easily switched between 3/2 and 5/2 for the same valve body. The flow rate of the valve is relatively large, and the air port can be selected between 1/4 and 1/2. Armed with aluminum enclosure coil, this solenoid valve is excellent for being used in hazardous area (Ex ia IIC T6 Ga).

APPROVED BY

ATEX IEC IECEx CE **IP67**

Coil Specification: QC7 (ALV110Q1C7)

Coil Enclosure	Die-casting aluminum + Epoxy coated
Wiring Connector	M20-1.5 or 1/2"NPT, Terminal Strip
Operating Voltage	12.5~24VDC(0.25~1.0W) at -20～60℃ 13.5~24VDC (0.31~1.0W) at -40～60℃
Insulation Protection	H Class
Insulated voltage	1000V
Duty factor	100% ED
Area Classification	Ex ia IIC T6 Ga, Ex ia IIIC T85°C Db

BODY TECHNICAL DATA

Spool valve/Body	Extruded aluminum + anodized coated
Seal	Buna N
Fasteners	Stainless steel
Function	5/2 and 3/2NC,Pilot acting,Monostable
Manual Override	on the body
Air Ports	G1/4" or NPT(optional 1/2")
Flow rate	CV =1.7 (30mm²)
Mounting	Namur mounting & In-line
Working Medium	≤ 40μm filtered and dried air
Working Temp.	-20℃～60℃ (optional: -40℃～60℃)
Wiring direction	Side wiring

Supply Specifications for Coil of C7

U max : in	30VDC
I max : in	650mA
W max : in	2980mW
C max : in	0
L max : in	0

Wiring connection instructions

As shown below, the coil C7 must be connected individually to an approved safety barrier. Placed in safe zone, these safety barriers can be used to supply ATEX pilot coil C7 installed in a hazardous zone. The electrical connection between the safety barrier(or interface) and the pilot c C7 can be made using ordinary wires or cables.The inductance of the connecting line between the safety barrier and the pilot coil C7 must be less than 0.5mH.

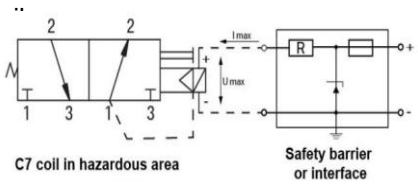

Wiring Operating

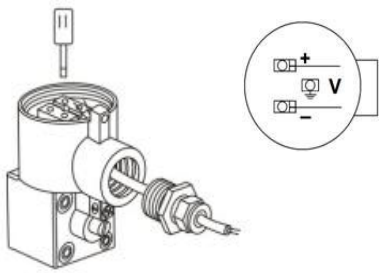

DRAWING AND MOUNTING

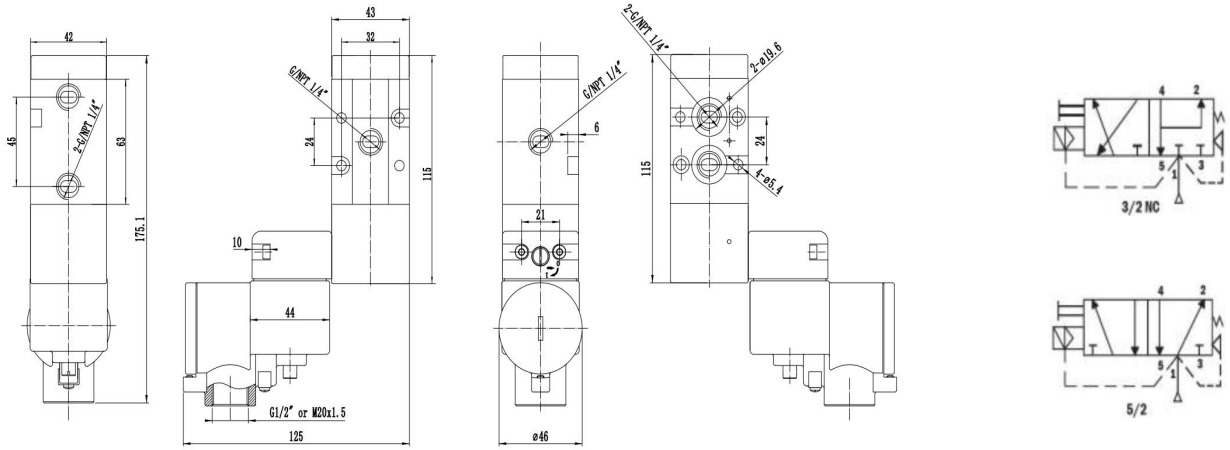

*For continuous improvement of the product, we reserve the right to alter the dimensions, technical data in this data sheet.